ADS Dental System

Self-Contained Large Orthodontic Mobile Cart OC-2

User Manual

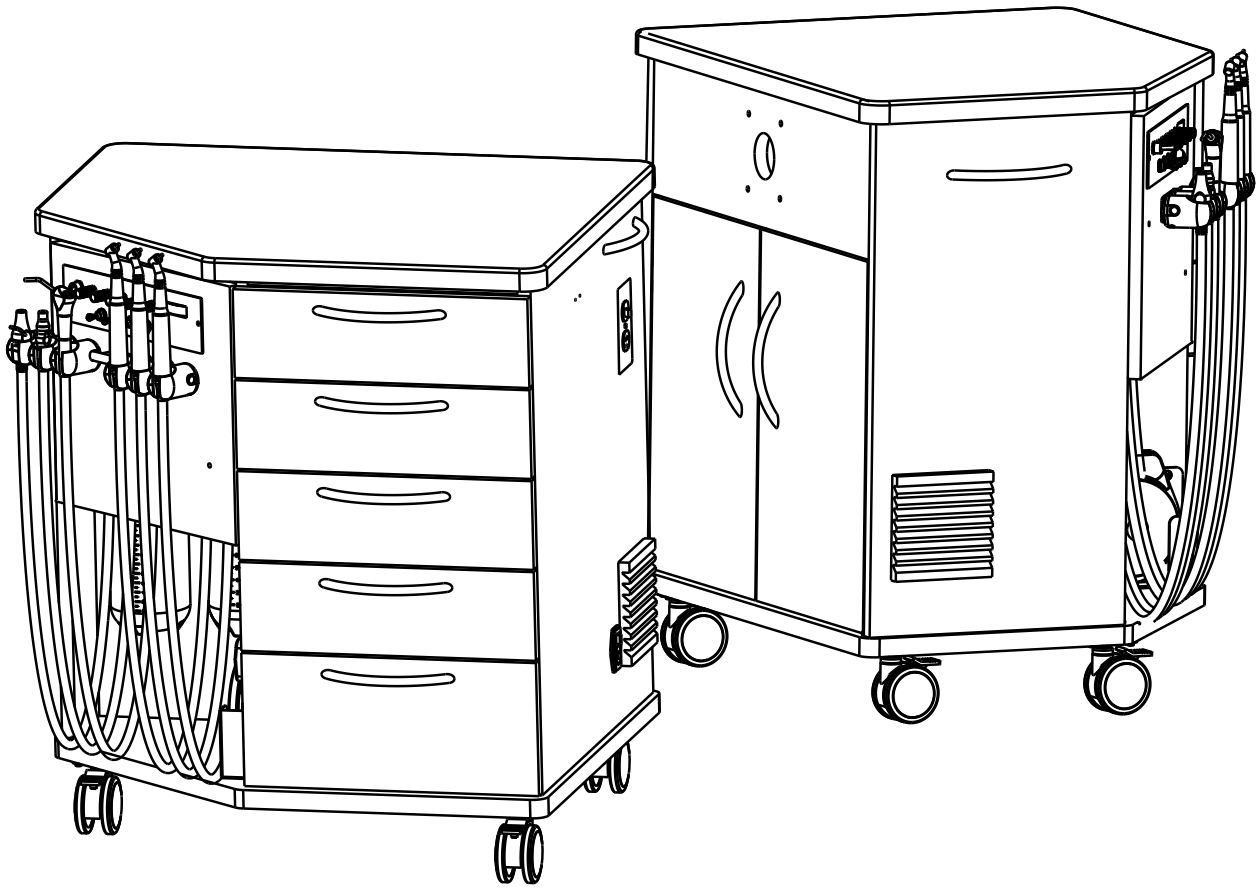

** Picture for Reference Only*

DEAR CUSTOMER

Thank you for purchasing an ADS product. The contents mentioned here relate to your safety, legal rights and responsibilities. ADS reserves the final right of interpretation of this document and related product documents. Product reform is our consistent purpose and pursuit. ADS may update product design, technical specifications and related documents without further notice. Please visit the ADS official website for the latest product information.

By using this product, you are deemed to have carefully read and accepted the terms of this disclaimer. You agree to take full responsibility for the use of this product and any consequences arising thereof. You agree to only use this product for legitimate purposes and to abide by this agreement and any other rules, policies and guidelines established by ADS. ADS will not be liable for any personal injury, accident, property loss, legal disputes or other adverse events arising from failure to follow the safety instructions, or due to force majeure factors. The user will bear full responsibility and losses.

Unless expressly stated in the after-sales service policy, this product and all related materials and content are provided on an "as is" basis, without any express or implied warranty or condition.

This product is not suitable for use by minors under 18 years old and others without full civil capacity. Please prevent such persons from accessing this product, and take extra precautions when operating it in their presence.

CONTENTS

1 DESCRIPTION OF RELATED SYMBOLS 5
2 INTRODUCTION 5
2.1 Application 5
2.2 Manual Contents 5
3 IMPORTANT SAFETY INSTRUCTIONS 6
4 SPECIFICATIONS 7
4.1 Product Dimensions 7
4.2 Technical Specifications 8
4.3 Transportation, Storage and Operating Environment 8
5 PRODUCT OVERVIEW 9
6 SYSTEM SETUP 10
6.1 Packing List 10
6.2 Unboxing Inspection 10
6.3 Product Installation 11
6.4 Monitor Bracket Installation (Optional) 12
6.5 Handpiece Installation 12
7 OPERATIONS 13
7.1 Mandatory Operations before Use 13
7.2 Control Panel Operations 14
7.3 Using Foot Control 16
7.4 Using Three-Way Syringe 17
7.5 Shutting Down the Dental Unit 17
8 TROUBLESHOOTING 18
9 MAINTENANCE 20
9.1 Emptying Liquid from Waste Collection Bottle 20
9.2 Emptying Water from Air Tank 21
9.3 Replacing the Oil Trap Gauze Pad 21
9.4 Cleaning the Solids Collector 21
9.5 Replacing a Fuse 22
10 LIMITED WARRANTY 23

1 DESCRIPTION OF RELATED SYMBOLS

Symbol	Description
	Protective earth (ground).
	Electrical and electronic waste - Do not dispose with domestic waste. Follow all local regulations for proper disposal.
	Manufacturer of equipment.
	Date of manufacture.
	General mandatory action sign. Not a caution. Take note of additional important instructions.
	Warning. Biological hazard.
	Warning. Failure to follow instructions may result in product damage or serious injury or death.
	Saliva ejector
	Water-cooling
	Air-cooling
	Ultrasonic scaler
	Temperature shipping and storage limits.

Symbol	Description
	Relative humidity shipping and storage limits.
	Atmospheric pressure shipping and storage limits.
	This side up.
	Fragile.
	Keep dry.
	Keep away from sunlight
	Stacking limit
REF	Catalogue number.
SN	Serial Number.
PN	Part Number.
LOT	Lot Code.
	Mandatory to consult the manual.

2 INTRODUCTION

Self-Contained Large Orthodontic Mobile Cart OC-2 is a fully self-contained dental delivery system. Central utility connections are not required. Just plug it into a standard electrical outlet, fill the water bottles and it is ready to go.

Added storage options and larger work surface eliminate the need for a 12 o'clock cabinet. The internal air compressor pressurizes the enclosed water system and powers the doctor's air handpieces, the included HVE and saliva ejector for the assistant, which are controlled by just one foot pedal.

2.1 Application

Thanks to the integrated, self-sufficient design, this dental unit provides a cost-effective way to set up an orthodontic office. And it is designed for simultaneous dentist and assistant use, which is ideal for rear delivery.

2.2 Manual Contents

This manual consists of the information for the following purposes: installation, operations, maintenance, and troubleshooting.

3 IMPORTANT SAFETY INSTRUCTIONS

- This machine requires professional maintenance. All electrical parts must be installed by authorized technicians. Stop using the product immediately and consult the vendor if any abnormality or damage occurs.
- This dental unit must be used in a good power supply environment. Be sure to use a 3-pin plug to ensure proper grounding of the unit.
- Before connecting to the power source, verify that the voltage and frequency match the power input information on the nameplate. Do not share outlets with other appliances to avoid unstable voltage that could cause damage. To avoid electric shock hazards, the dental unit can be grounded with a protective earth connection, but incorrect grounding plugs can also cause electric shock hazards.
- Be sure to unplug the equipment before maintenance/repair or cleaning. Ensure the equipment is completely disconnected before beginning work.
- Check cables and plugs for damage. Ensure the power cord is not pressed by other items. Do not let the power cord contact sharp objects to prevent scratches.
- Keep the environment clean. Disconnect power before cleaning. Wipe the exterior surfaces with a soft cloth dampened with mild detergent. Then wipe the dental unit with a soft dry cloth.
- The company is not liable for any malfunction or damage caused by the following reasons:
  - Installation, modification, or repair by personnel not from the company or designated by the company.
  - Malfunction or damage to the company's products due to other companies' products not purchased from the company.
  - Modification, maintenance, or repair using non-genuine parts not specified by the company.
  - Failure to follow the precautions and operating methods described in this manual.
  - Malfunction or damage due to environmental conditions not meeting the usage conditions described in this manual, such as power supply and installation environment.
  - Fire, natural disasters (earthquakes, floods, lightning strikes, etc.)
- Handpieces cannot be used without cooling water. Without cooling water, the handpiece quickly overheats, causing injury to the teeth. Always ensure cooling water is connected when using handpieces.
- The power switch is not a safe power disconnect. The power outlet is the only safe electrical shutoff dental unit. Ensure the power outlet can be easily operated.
- Only trained and skilled personnel can operate the equipment. Improper operation can cause serious personal injury.
- The dental unit cannot be used in flammable anesthetic mixture environments.
- The dental unit cannot be used in environments with mixtures of anesthetics and air, oxygen, or nitrogen.
- Do not place the dental unit together with oxygen bottles.
- Do not use liquids or detergents containing flammable substances.
- Unplug the power when the operator leaves.
- Dispose of waste liquid and waste in accordance with local sanitation laws and regulations.
- Do not use or store the dental unit outside of the specified environment. Keep the dental unit stable and level.
- Do not drop accessories to avoid damage to the dental unit.
- Ensure the power cord remains safe and does not detach during treatment.
- Connect the polishing handpiece ONLY to the dedicated handpiece tubing (non-standard feature). Any damage caused by connecting to other handpiece tubing, such as valve clogging, is not covered under the warranty. For details of dedicated polishing handpiece tubing, contact dealers or the manufacturer.

4 SPECIFICATIONS

4.1 Product Dimensions

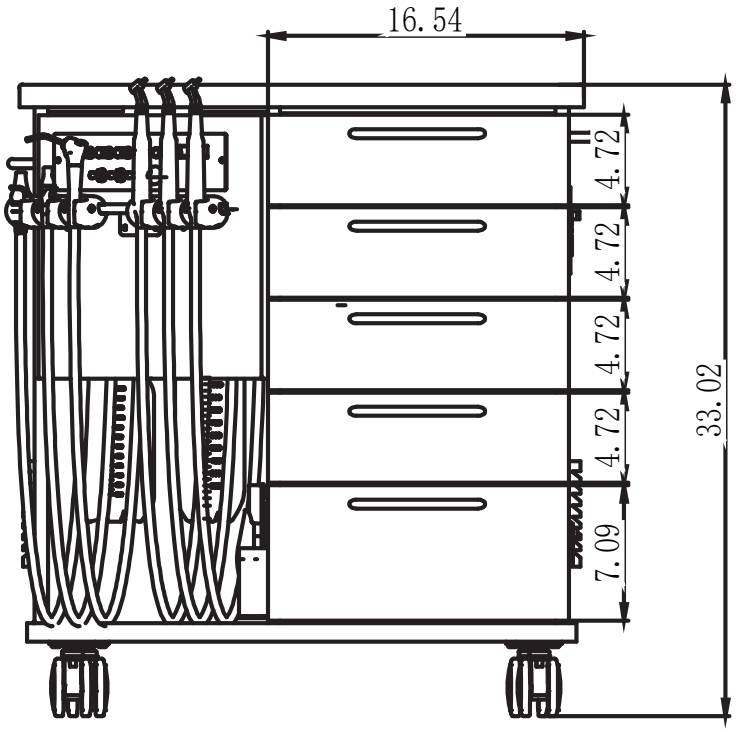

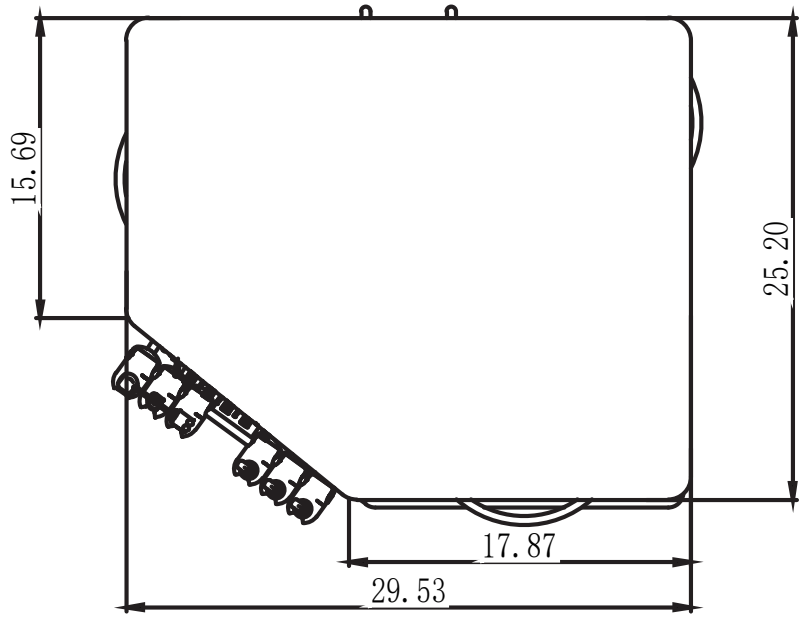

4.2 Technical Specifications

Power Data	Input Voltage: AC 110 V, 60 Hz Input Power: 1.05 HP Fuse: 15 A **WARNING**: Refer to the label and brand near the outlet of your purchased dental unit for actual power requirements. If the voltage is too high or too low, it can affect the normal operation of the dental unit and even damage the machine. In this case, install a stabilized power supply with a rated power no less than 1.34 HP.
Air Supply	This dental unit has a built-in air compressor to provide clean air source. Rated Pressure: 0.5 MPa Max Pressure: 0.7 MPa Flow Rate: ≥40 L/min
Water Supply	The handpieces and other devices are supplied with water from the purified water bottle, so be sure to add purified water to the bottle.

4.3 Transportation, Storage and Operating Environment

To ensure normal operation and avoid damage, the equipment must be transported, stored, and used under suitable temperature and relative humidity conditions:

Temperature/Relative Humidity	**Details**
Transportation and Storage	• Temperature: -10°C ~ +50°C • Relative Humidity: ≤ 90% • Atmospheric Pressure: 50Kpa ~ 106Kpa
Operation	• Temperature: 5°C ~ 40°C • Relative Humidity: ≤ 80% • Atmospheric Pressure: 86kpa ~ 106kpa
NOTE: This dental unit cannot be used in environments with flammable anesthetic mixtures with air, oxygen, or nitrous oxide.	

5 PRODUCT OVERVIEW

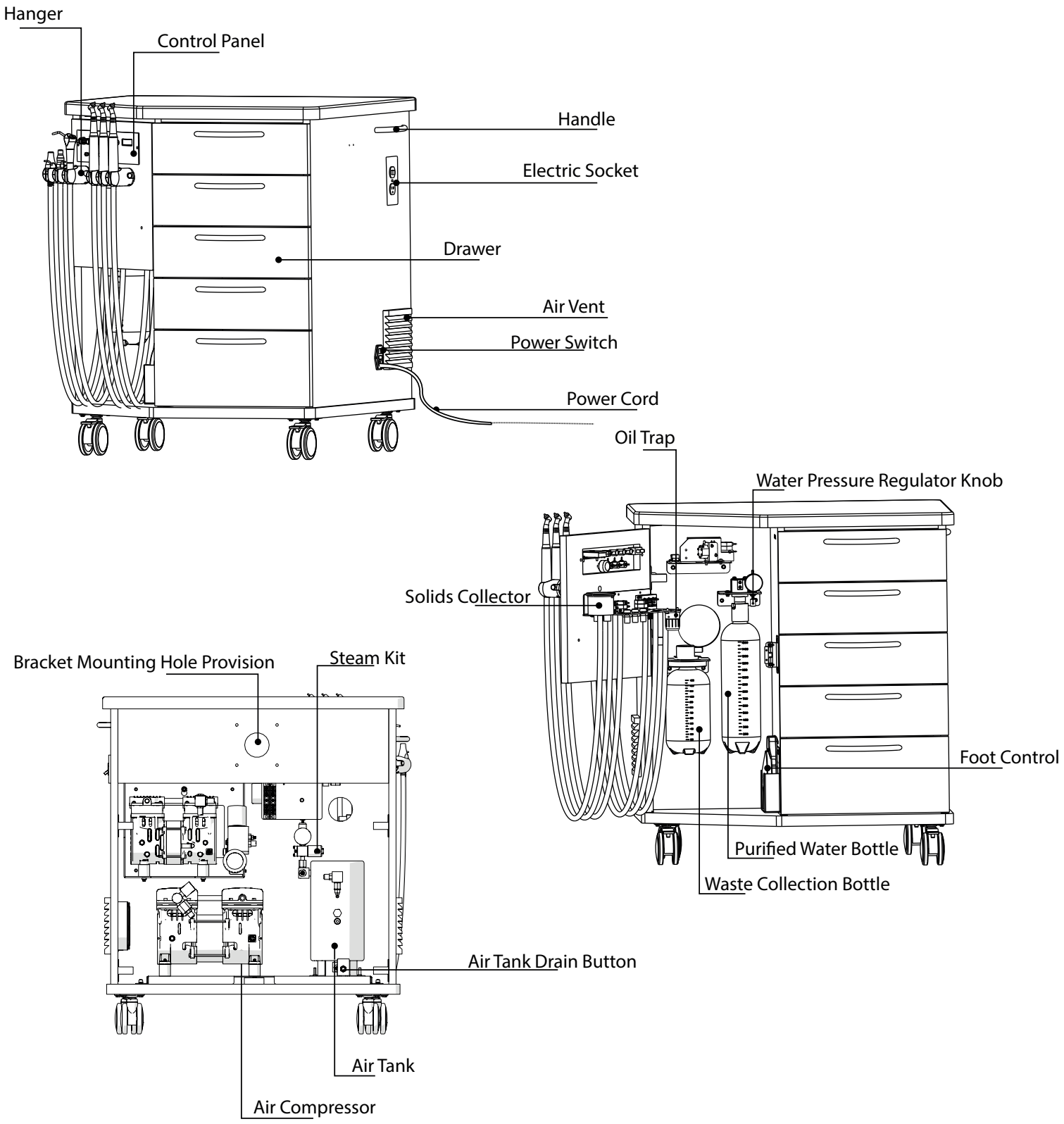

6 SYSTEM SETUP

6.1 Packing List

No.	Description	Quantity
1	Main Unit	1
2	American Drain Fitting (Dia. 15.6)	1
3	User Manual	1
4	Fuse	1
5	Y-Splitter Power Cord, UL Approved, 3 meters (10 feet)	1
6	O-Ring (for Bent Tip 3-Way Syringe)	3
7	M3 Hex Key	4

No.	Description	Quantity
8	High Volume Evacuator Tip	1
9	3-Way Syringe Tip	1
10	Saliva Ejector Tip	1
11	3-Way Syringe Button (with Spring)	2
12	Metal Handle Adapter for Saliva Ejector	2
13	Throat Retaining Ring (Dia. 15-25)	1
14	Inspection Card	1
15	Warranty Card	1

6.2 Unboxing Inspection

To do the unboxing inspection:

1. Open the outer box and inspect the dental unit for any damage.
2. Check the accessories against the packing list to ensure nothing is missing or damaged.
3. Contact your dealer or our company immediately if you have any questions.

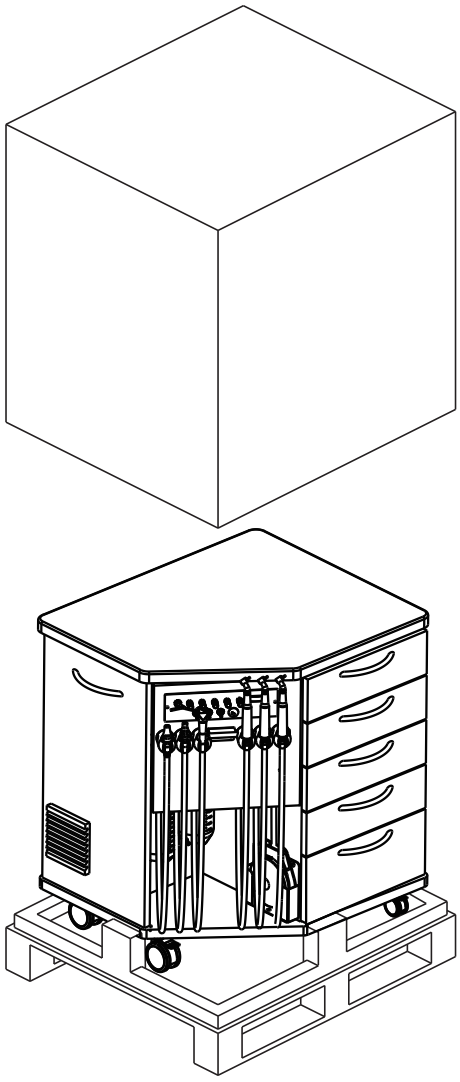

6.3 Product Installation

To install the unit:

1. Lift the unit with two people on the bottom edge of the unit.
   NOTE: Do not lift the unit by grasping the edge of the tabletop.

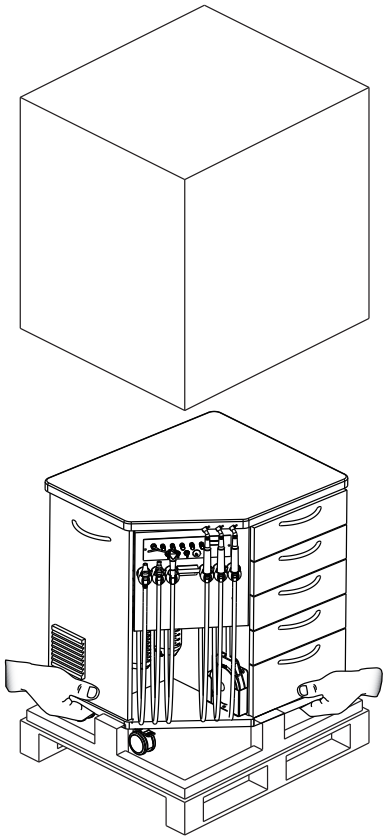

2. Place the unit on the floor.
   NOTE: The floor must be flat, level, and firm to prevent accidents due to surface instability.
3. Take the foot control out of the bracket and place it on the floor.
4. Remove the zip ties securing the high volume evacuator tubing, saliva ejector tubing, 3-way syringe tubing, handpiece tubings, and hang each item on the hanger.
5. Insert the male plug of the power cord into the female socket of the unit.

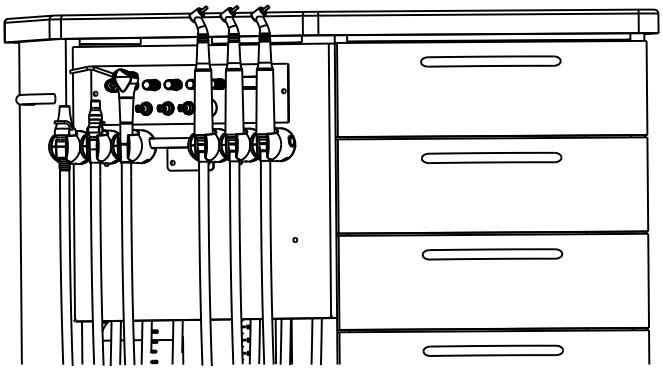

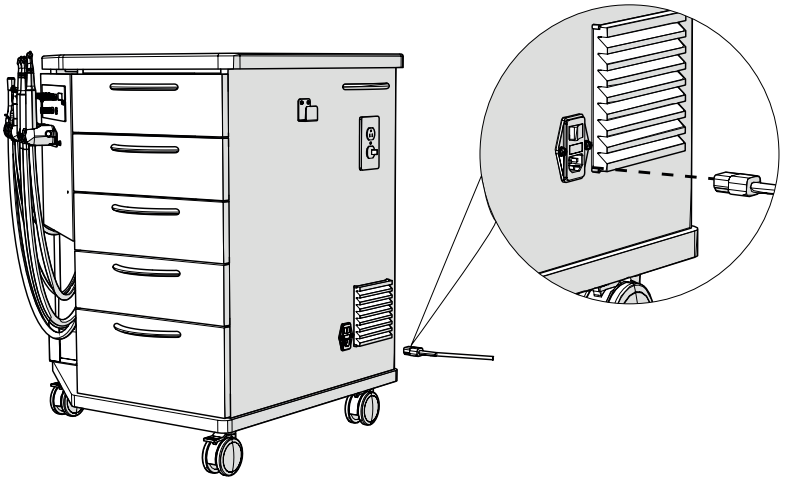

6.4 Monitor Bracket Installation (Optional)

The unit provides pre-drilled mounting holes for installing the monitor bracket.

To install the monitor bracket installation:

1. Use four screws to install the monitor base at the back of the unit.

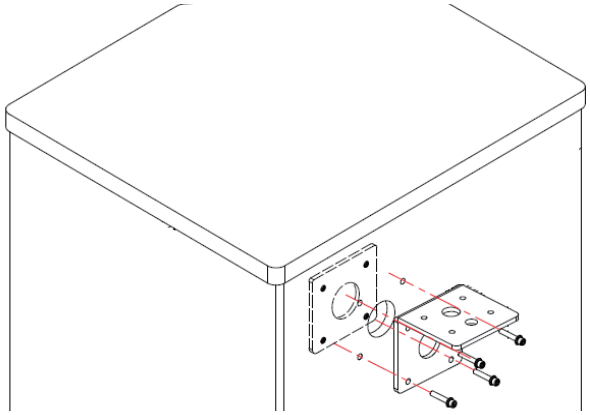

2. Use two nuts to lock the monitor turntable onto the mounting base.

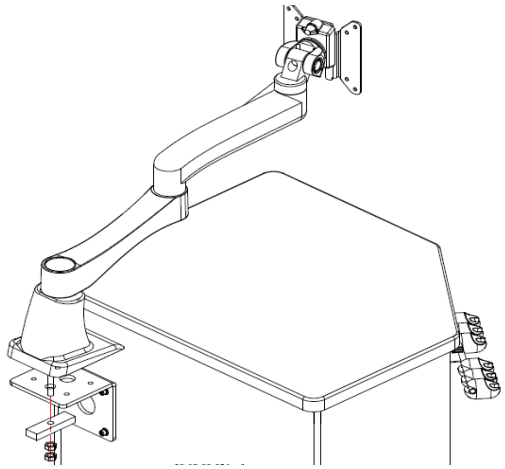

3. Use four screws to lock through the bracket and the monitor.

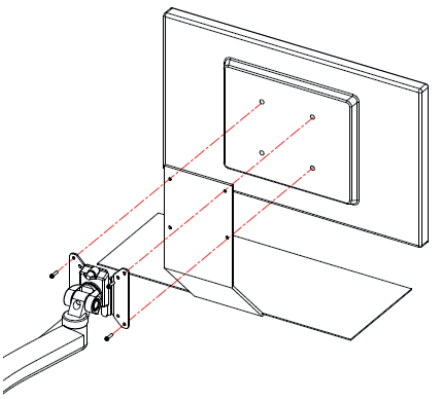

6.5 Handpiece Installation

The unit provides three air-driven handpiece connectors. Connect the handpieces according to their instruction manuals, while being cautious not to operate them with no load or overload.

7 OPERATIONS

WARNING

Only licensed dental professionals can operate or perform maintenance on this dental unit. Improper use or disassembly by untrained individuals can result in electric shock, burn hazard, infection control issues, or damage to the dental unit.

For safe operation of this unit:

- Carefully read all sections of this user manual before use, especially the Safety Introduction and Operation sections.
- Ensure all operators are licensed professionals with training on dental equipment safety and infection control. Provide operator training if needed.
- Follow all manufacturer instructions for proper equipment setup, cleaning, disinfection, and maintenance.
- Use only manufacturer recommended parts and accessories. Do not modify or disassemble components.
- Ensure electrical safety - use grounded outlet of correct voltage, do not operate with damaged cord or plug.
- Follow all local regulations for operation of dental radiographic equipment if unit is so equipped.
- Report any dental unit issues, damage, or malfunction immediately to manufacturer. Discontinue use if any safety issue is suspected.

7.1 Mandatory Operations before Use

This section describes the actions that must be done before use.

7.1.1 Adding Water to Purified Water Bottle

Before using the dental unit, add purified water to the purified water bottle, which is then used as cooling water for the handpiece. The handpiece cannot be used without water coolant. Without water coolant, the handpiece quickly overheats, causing damage to the teeth.

For instructions, see Section 7.1.1.1 on page 13.

NOTE

If adding purified water to the bottle during use, must also empty waste liquid from the waste collection bottle to avoid overflow. This is because that the waste builds up beyond the capacity of the waste collection bottle.

7.1.1.1 Adding Water to or Emptying Water from Purified Water Bottle

To add the purified water to or empty the water from the purified water bottle:

1. Flip **Water Supply Toggle** left to turn off the toggle.
2. Wait until the sound of air leakage stops.
3. Unscrew the bottle from the quick-release connector clockwise until the metal rod is unlocked.
4. Pull the bottle down from the quick-release connector.
5. Do one of the followings:
   - Add purified water to the bottle.
     The water in the bottle must be less than 600 ml.
   - Empty the water from the bottle.
6. Screw the bottle back counterclockwise.
   NOTE: Align the metal rod within the quick-connect fitting to the locking position on the quick-release connector.
7. Flip **Water Supply Toggle** right to turn on the toggle.

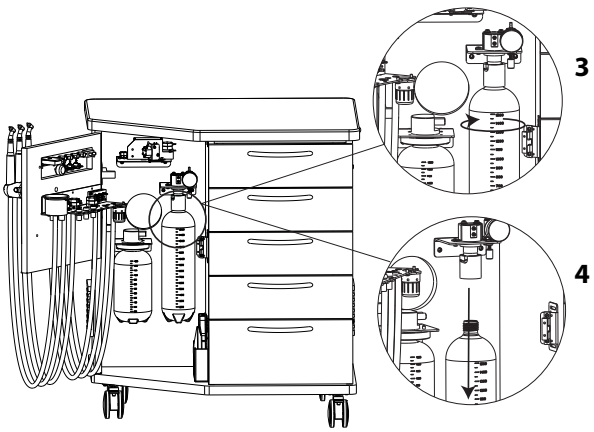

7.1.2 Powering On

Prerequisite

The **Suction Switch** toggle is in the **OFF** position.

Procedure

1. Insert the grounded power plug of the power cord into a grounded power outlet.
2. Press **I** of Power Switch.

Result: The dental unit is powered on and the indicator light inside Power Switch is on.

NOTE	The fans on air vents must be on. If not, contact the customer support.

7.1.3 Turning On or Off Master Toggle

Master Toggle is designed to turn on or off the water and air supply for the dental unit.

To turn on or off **Master Toggle**:

- Flip **Master Toggle** to the **ON** position.
- Flip **Master Toggle** to the **OFF** position.

7.2 Control Panel Operations

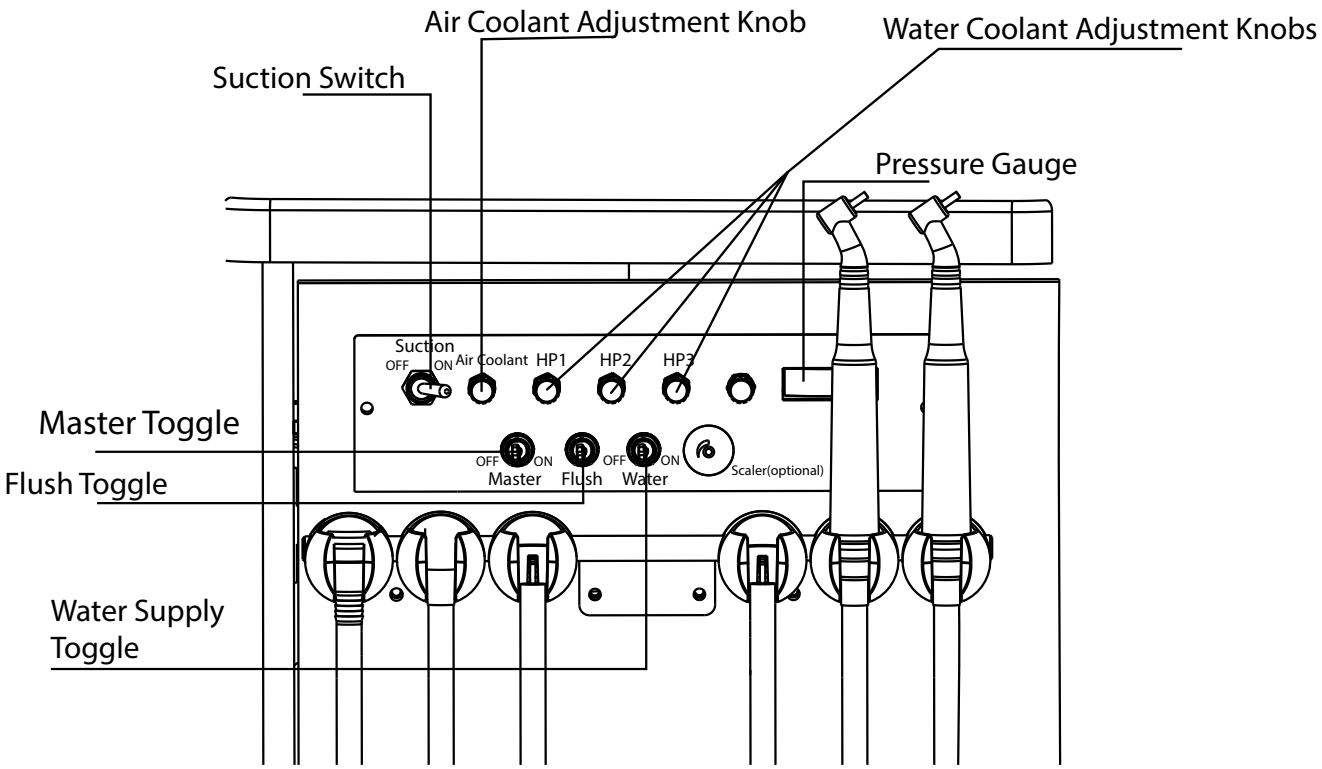

7.2.1 Turning Suction On or Off

To turn suction on or off:

- Flip the **Suction Switch** toggle to the **ON** position.

NOTE	If the suction is not on, flip the **Suction Switch** toggle to the **OFF** position and back to the **ON** position.

- Flip the **Suction Switch** toggle to the **OFF** position.

7.2.2 Adjusting Suction Pressure

The user can adjust the suction pressure of High Volume Evacuator (HVE) and Saliva Ejector (SE) higher or lower as needed.

To adjust suction pressure:

1. Turn suction on.
2. Lift the HVE, SE, or both from the hanger.
3. Move the levers on the valve bodies of HVE, SE, or both down to the limits.
4. Adjust suction pressure of HVE or SE separately as follows:
   - Move the lever on the valve body of HVE or SE upward to decrease suction pressure.
   - Move the lever on the valve body of HVE or SE downward to increase suction pressure (up to the pressure set in Step 4).

NOTE	**NOT** recommend using the HVE and SE **at the same time**. If both HVE and SE are lifted from the hanger, adjust the valve body levers to have proper suction pressure on HVE and SE.

7.2.3 Flushing the Tubings

Flush Toggle can be used to perform rapid cleaning and rinsing of internal waterlines within the unit.

DANGER	• Between each patient, perform a 20-30 seconds air and water evacuation from the handpiece tubing. • This precaution serves primarily to remove any accumulated impurities, microorganisms, or other contaminants from the water supply, reducing the risk of cross contamination between patients.

To flush the tubings after each patient:

1. Disconnect the handpieces.
2. Hold all handpiece tubings over a sink, cuspidor bowl, or basin.
3. Flip **Flush Toggle** right for 20-30 seconds.

7.2.4 Adjusting Handpiece Air Coolant Flow

Air Coolant Adjustment Knob adjusts the flow of air to the handpiece.

To adjust the flow:

1. Remove the dental handpiece from the hanger.
2. Step on the foot control disc to activate the handpiece.

3. Adjust the air coolant flow.
   – Turn the adjustment knob counterclockwise to increase flow.
   – Turn the adjustment knob clockwise to decrease flow.

   NOTE: Pressure Gauge indicates the working pressure of the handpiece. Do not exceed the rated maximum pressure during use to avoid damage to the equipment. Adjust carefully. The handpiece is a precision device, read the instruction manual before use.

7.2.5 Adjusting Handpiece Water Coolant Flow

Water Coolant Adjustment Knob adjusts the water coolant flow to the handpiece.

To adjust the flow:

1. Remove the dental handpiece from the hanger.
2. Turn on the water coolant. For details, see Section 7.3 on page 16.
3. Step on the foot control disc to activate the handpiece.
4. Adjust the water coolant flow:
   – Turn the adjustment knob counterclockwise to increase flow.
   – Turn the adjustment knob clockwise to decrease flow.

7.2.6 Adjusting Ultrasonic Scaler Frequency

Ultrasonic Scaler Frequency Adjustment Knob controls the scaler ultrasonic frequency.

Prerequisite

The following prerequisite applies:

- The ultrasonic scaler is installed and properly set up. For details, refer to the corresponding documentation from the provider of the ultrasonic scaler.

Procedure

To adjust the scaler frequency:

1. Remove the scaler from the hanger.
2. Step on the foot control disc to start the scaler.
3. Adjust the ultrasonic frequency:
   – Turn the adjustment knob counterclockwise to increase the frequency.
   – Turn the adjustment knob clockwise to decrease the frequency.

7.3 Using Foot Control

The foot control can be used to activate the instruments and the water coolant supply.

To use the foot control:

- Turn on the water coolant: Flip **Wet/Dry Toggle** to the **ON** position.
- Turn off the water coolant: Flip **Wet/Dry Toggle** to the **OFF** position.
- Activate the instruments: Step on the foot control disc.
- Deactivate the instruments: Release the foot control disc.

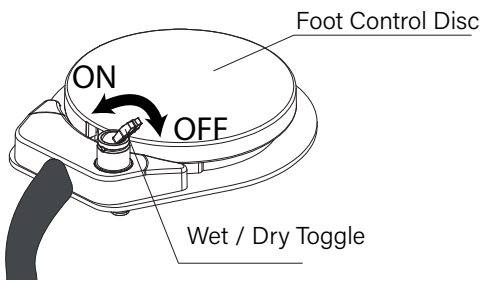

7.4 Using Three-Way Syringe

Before using the three-way syringe:

1. Pick up the three-way syringe.
2. Press and hold the locking ring, insert the tip, release the locking ring.
3. Check that the water and air connections match the symbols on the syringe.

To use the three-way syringe:

- Pressing the air button on the three-way syringe provides air.
- Pressing the water button on the three-way syringe provides water.
- Pressing the air and water buttons simultaneously on the three-way syringe provides a spray.

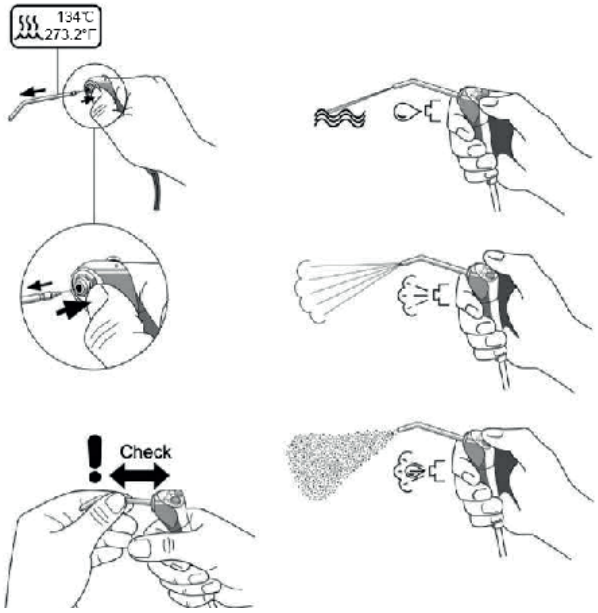

7.5 Shutting Down the Dental Unit

To shut down the dental unit:

1. Empty water from the air tank. For details, see Section 9.2 on page 21.
2. Turn off **Master Toggle**.

8 TROUBLESHOOTING

Problem	Possible Cause	Solution
Low suction during operation	**Suction Pressure Adjustment Knob** is closed to the lower limit or the solids collector is block	Check **Suction Pressure Adjustment Knob** and the solids collector, turn **Suction Pressure Adjustment Knob** counterclockwise, clean the solids collector.
	Vacuum pump is blocked	Replace the vacuum pump.
	Waste Collection Bottle is not tightened well, or crack with the bottle connector, air leaking	Check **Waste Collection Bottle**, check the bottle connector, tighten **Waste Collection Bottle** or replace the bottle connector.
	HVE and SE are used at the same time	Adjust the valve body levers on the HVE and SE to have proper suction pressure on HVE and SE.
No suction during normal operation	**Suction Switch** is off or malfunctions	Check **Suction Switch**, turn it on or replace it.
	Suction Pressure Adjustment Knob is turned to the lower limit or malfunctions	Check and adjust or replace knob
	Suction tubing inside unit is bended	Open the cabinet door at the back of the unit, check the suction tubing, re-fix the suction tubing properly.
Three-way syringe leaks water or air	Core of three-way syringe not reset, has debris, or O-ring missing	Check buttons for water and air on three-way syringe, clean or replace O-ring
No cooling water when handpiece running at high speed	Purified water depleted	Check water level in the purified water bottle, add more purified water
	Water Supply Toggle is off or malfunctions	Check **Water Supply Toggle** of purified water bottle, turn it on or replace it.
	Wet/Dry Toggle of the foot control is off	Check and adjust or replace toggle
	Water Coolant Adjustment Knob is turned to the lower limit or malfunctions	Check and adjust or replace knob
Air compressor not functioning normally	Power connected incorrectly	Check whether power is connected properly. If not, reconnect the power.
	Fuse blown	Check fuse, unplug, open fuse cover, replace fuse
	Wiring fault or loose components	Open the cabinet door at the back of the unit, check internal wiring and electronic components, have technician correctly reconnect all wiring per circuit diagram
	Air compressor overloads and stops after prolonged operation	Stop using air compressor until temperature decreases

Problem	Possible Cause	Solution
Air compressor does not stop operating	No air line or ruptured air line	Open control panel, check all air tubing are connected, connect all air lines or replace ruptured air line
	Leaking from solenoid valve	Open the control panel, locate the solenoid valve, examine the valve core for any potential impurities., clean the valve core or replace the valve
	Suction leaking or leakage from air tubings	Check the suction and all air tubings connection, and all connectors. Turn off the suction, tight all air tubings well or replace it
	Pressure switch malfunctions	Check whether the pressure switch can work in normal, adjust, or replace it
The unit is not in use, but compressor restarts automatically.	Air tubings with leaking	Check all air tubings connection, avoid leaking
	Air leaking from check valve	After compressor stopped, check whether there is air leaking from solenoid valve, remove the check valve, clean the inner core
The unit with too much shake and noise, compressor cannot start	Electric voltage is too low	Check the electric power voltage with multimeter, wait till voltage is stable or install a voltage stabilizer
The suction is off, when the **Suction Switch** toggle is in the **ON** position.	The **Suction Switch** toggle is in the **ON** position before powering on the unit.	Flip the **Suction Switch** toggle to the **OFF** position and back to the **ON** position.

9 MAINTENANCE

WARNING

- Make sure to cut off the electricity supply when leaving at the end of each day.
- Only disinfectant can be used to disinfect the handpiece tubing, high temperature disinfection is not allowed.
- Improper fuses can cause fire. To replace a fuse, see Section 9.5 on page 22.
- Before refilling the purified water bottle, empty the liquid from the waste collection bottle to prevent the vacuum pump from burning out. For instructions, see Section 9.1 on page 20.

NOTE

- Run the handpiece for about 2 minutes before use to flush the water and air lines.
- After use, flush the tubing by sucking up a cup of water to prevent clogging and damage.
- After use, empty water from the purified water bottle. For instructions, see Section 7.1.1.1 on page 13.
- After use, empty liquid from the waste collection bottle. For instructions, see Section 9.1 on page 20.
- After daily work, empty water from the air tank. For instructions, see Section 9.2 on page 21.
- Replace the gauze pad of the oil trap once a week for normal use and more often for heavier use. For instructions, see Section 9.3 on page 21.
- Clean the solids collector screen at least twice a week to ensure that the vacuum system works properly. For instructions, see Section 9.4 on page 21.
- Wipe down surfaces after use to prevent corrosion.
- Do not use acidic or alkaline cleaners.
- Refer to the handpiece instruction manual for operation and maintenance. Pay attention to cleaning and lubrication.

DANGER

- Rotate the handpiece for 1-2 seconds and flush for 20-30 seconds before and after use to expel debris and prevent cross-contamination.
- Sterilization requirements for the 3-way syringe and handpieces must fully comply with handpiece regulations:
  - Pick up the used 3-way syringe and handpieces.
  - Clean off visible contaminants before sterilization.
  - Steam sterilize at 132°C for 10 minutes.
  - Ensure that disinfection is completed before the next patient.

NOTE: For non-removable components, disposable plastic sleeves must be used.

9.1 Emptying Liquid from Waste Collection Bottle

To empty the liquid from the waste collection bottle:

1. Unscrew the bottle from the connector clockwise.
2. Empty the liquid from the bottle.
3. Screw the bottle back counterclockwise.

9.2 Emptying Water from Air Tank

To empty the water from the air tank:

1. Press **O** of **Power Switch**.
   Step result: The dental unit is powered off and the indicator light inside Power Switch is off.
2. Pull out the drain tube.
3. Place a container under the drain tube to collect the water.
4. Press and hold the **Air Tank Drain Button**.
5. Wait until the sound of air leakage stops.
6. Release the **Air Tank Drain Button**.
7. Put the tube back where it belongs.

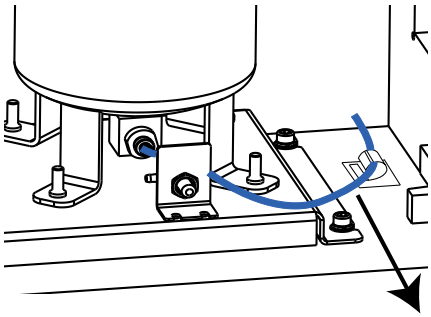

9.3 Replacing the Oil Trap Gauze Pad

To replace the gauze pad of the oil trap:

1. Open the door in the front panel.
2. Unscrew the oil trap cup clockwise.
3. Discard the old gauze pad.
4. Place the new gauze pad inside the oil trap cup.
5. Screw the oil trap cup back counterclockwise.
6. Close the door in the front panel.

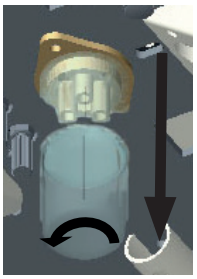

9.4 Cleaning the Solids Collector

The solids collector helps in preventing solids from entering the central vacuum system.

To clean the solids collector:

1. Flip the **Suction Switch** toggle to **OFF**.
2. Open the control panel.
3. Rotate the solids collector cap counterclockwise into place.
4. Pull out the cap.
5. Pull out the solids collector screen.
6. Pry open the solids collector screen cover by pressing the side of the cover.
7. Clean the screen.
8. Press the cover back into place.
9. Place the cap back.
10. Rotate the cap clockwise into place.
11. Close the front panel.

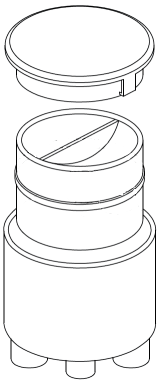

9.5 Replacing a Fuse

NOTE	This procedure must be done under the professional supervision.

To replace a fuse:

1. Unplug the power cord from the power supply and remove the fuse from the allocated outlet.
2. Remove the faulty fuse.
3. Insert a new fuse with the correct rated capacity and melting characteristics.
4. Press the lid back on.

10 LIMITED WARRANTY

ADS warrants the items portrayed within the table underneath against defects in material or workmanship beneath typical planning utilize when obtained from ADS or an authorized ADS dealer. The guarantee period is measured from the date of ADS's invoice. In the event that you've got questions about when your guarantee scope starts, it would be ideal if you contact ADS Client Service.

Product	Warranty Period
All Dental Chairs; Portable Dental Unit; Operator and Assistant Stools; Dental Lights, Delivery Systems; Monitor Mounts; Dental Furniture; Mechanical Room Compressors and Vacuums; and original components	5 years
Electric Motors, Tubing, and Control Modules	1 year
Replacement components and parts	Remainder of original product warranty period or 1 year (whichever is greater)

Items (counting accessories, components and replacement parts) not made by ADS are secured by the original manufacturer's guarantee and are not secured by ADS's guarantee. Illustrations incorporate, but are not restricted to, sterilizers, maintenance equipment, cameras, curing lights, ultrasonics, control modules, electric motors, attachments, handpieces, and turbines. If you don't mind contact ADS Client Service for specific guarantee information of the initial producer otherwise you may contact the original producer specifically.

Exclusions

ADS's Restricted Guarantee does not cover:

a) ADS items that have been utilized in coordinate or roundabout combination with unapproved third-party items, counting third-party parts (i.e. items not authorized or fabricated by ADS).

b) Representations and guarantees made by any individual or substance other than ADS.

c) The harm caused by typical wear and tear or the common breakdown of materials over time.

d) The harm caused by inappropriate establishment, care, or upkeep, mischance, abuse, manhandling, disregard, carelessness, altering, disappointment to look for and get repair or substitution in a convenient way, changes, cargo harm, common catastrophe, or any other cause or constrain majeure past ADS's control (a disappointment to take after ADS's Enlightening for Utilize and pertinent item operation and support enlightening, counting establishment enlightening, will void the guarantee).

e) The harm caused by schedule upkeep or in association with the utilization of chemicals and forms for cleaning, or sterilizing.

f) Changes in color caused by normal or fake light.

Consumable items are not secured by this Restricted Guarantee. Contact ADS Client Service with questions about guarantees or returns for these items.

Warranty Assistance and Contact Information

In case you obtained your product from an ADS dealer, for guarantee help, it would be ideal if you contact your authorized ADS dealer amid the guarantee period. The dealer will examine with you courses of action for the product(s) to be conveyed to them for assessment or for assessment to happen on location.

In the event that ADS decides that the item contains a deformity that's secured beneath this Restricted Warranty, the item will be repaired or supplanted with an item that's comparable to the initial execution. In case the item is secured beneath ADS's Constrained Guarantee, you'll not be charged for parts, but the ADS dealer performing the repair(s) will charge you a call-out charge (in the event that pertinent) and any applicable repair benefit expenses. In certain circumstances, you will be mindful of expeditiously shipping the item to ADS and related transport/shipping costs; ADS isn't capable of bundles misplaced or harmed in travel, and you're dependable for purchasing insurance. Please note that styles and color alternatives accessible at the time of benefit may change. In the event that an item or color has been suspended, a substitution within the item fashion or color that's the foremost comparative to the original will be given.

In case you have got a question that's not tended to in this Restricted Guarantee or on the off chance that you acquired your item straightforwardly from ADS and require guarantee help, it would be ideal if you contact ADS Client Service. Reaction time is inside 24 hours.

ADS Dental System

Add: 1590 S Milliken Ave., unit A, Ontario, CA 91761

Email: sales@adsequip.com

Tel: (626)620 0456

Customer service is available Monday through Friday, from 8:30 a.m. to 5:30 p.m.

Shipping

All prices are Ex Works Ontario California, U.S.A.
Standard shipping will be by ground. Air or expedited service is available upon request.

Return and Refund

ADS Equipment will accept return and unused product within 60 days of ship date, subject to the following conditions:

The product must be unused, saleable and returned in the original shipping materials. The box or boxes may have been opened but all contents must be returned.

Call: ADS Equipment at 626.620.0456 with the original purchase order number and request a return materials authorization (RMA) number be printed on the box (eg. RMA 12345).

Ship product to: ADS Equipment 1590 S. Milliken Ave. Unit A Ontario, CA. 91761

Return shipping cost is the customer' s responsibility.

After receipt and inspection of the returned product, ADS will either credit the customer' s account or return payment via the payment card for the invoiced product price plus applicable taxes less a 25% restocking fee and payment discounts taken. Shipping and handling charges are not subject to a refund.

Damaged in Transit

If a product is damaged upon delivery to our dealer, it is the dealers responsibility to notify the shipper immediately of the damage, so a claim can be assessed. They must also notify ADS immediately.
Special Order Items
Special orders cannot be returned

Warranty Limitations; Exclusive Remedy; Damages Disclaimer

ADS's sole commitment and your exclusive remedy beneath this Restricted Guarantee is the repair or substitution of defective items or components. ADS's Restricted Guarantee is in lieu of all other guarantees and commitments, express or inferred. ADS explicitly repudiates all inferred guarantees, counting but not restricted to inferred guarantees of merchantability, toughness, or wellness for a specific reason or utilization.

ADS might not be obligated for and explicitly repudiates any coordinate, uncommon, roundabout, coincidental, reformatory, uncommon, commendable, or considerable harms or delays, counting but not constrained to, harms for the misfortune of benefits or pay, the misfortune of utilize, downtime, property harm, or individual harm, in any case, caused, whether for breach of guarantee, breach of contract, tort (counting carelessness), strict obligation or something else.

Limitation of Liability

Without constraining the harms disclaimer above, the maximum liability of ADS and its providers, associates, dealers, affiliates, specialists, and each of their representatives, chiefs, and temporary workers to you are constrained to the purchase price you paid for the item. A few wards don't permit the restriction or prohibition of accidental or noteworthy harms, so the above restrictions or prohibitions may not apply to you in entirety or in portion.

Adjustment or Withdrawal of the Warranty

ADS reserves the correct in its caution to alter or pull back this Restricted Guarantee at any time without taking note. Any adjustment or withdrawal will not influence items as of now introduced and completely paid for earlier to the date of such alteration or withdrawal. No ADS merchant, affiliate, benefit supplier, agent, or representative is authorized to form any alteration, expansion, or expansion to this guarantee.

ADS Dental System

ADS Dental System

Add: 1590 S Milliken Ave., unit A, Ontario, CA 91761

E-mail: sales@adsequip.com

Tel: (626)620 0456

Technical Support: 800-488-9708

www.adsdental.com / **www.adsequip.com**

● P/N: 8503236 ● Rev. E ● Issue Date: 2025/12/25